RoHS Compliant Pb

Goldconn®

REV	ECN No.	DATE	REMARK
A	NEW	2020.09.28	NEW RELEASE

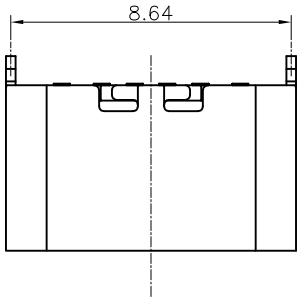

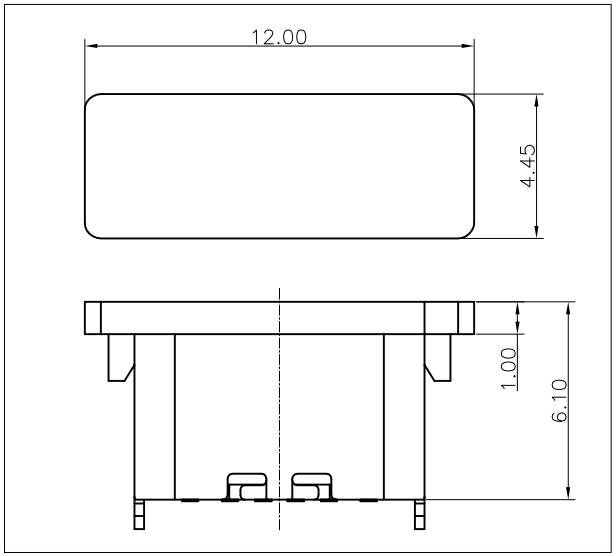

加塞子示意图

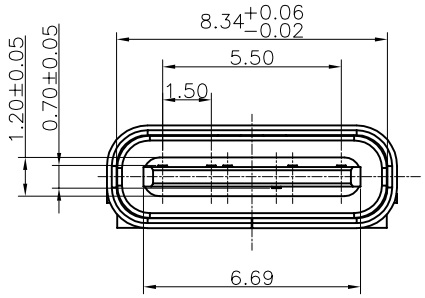

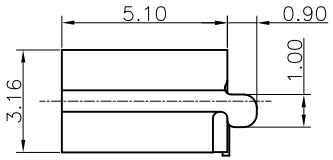

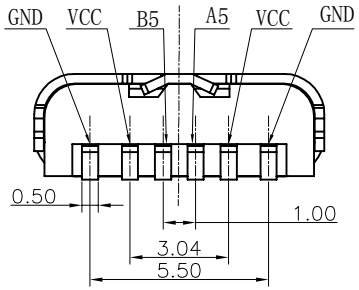

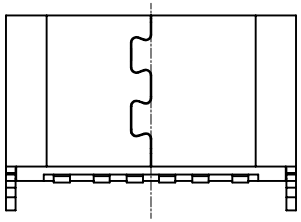

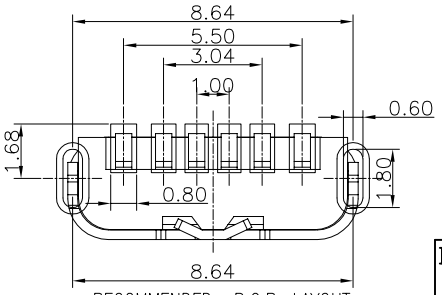

RECOMMENDED P.C.B. LAYOUT

TOLERANCE UNSPECIFIED ±0.05mm

NOTES:

SPECIFICATION:

1. CURRENT RATING: 3.0A MAX
2. VOLTAGE: 100 VAC
3. TEMPERATURE RANGE: −30°C~+85°C
4. CONTACT RESISTANCE: 40 MILLIONHM MAX
5. INSULATION RESISTANCE: 100 MEGOHMS MIN
6. LNSERTION FORCE: 5N~20N
7. UNMATING FORCE: 8N−20N
8. DURABILITY: 10000 CYCLES
9. PART NUMBER CODE:(产品料号)

CF1 06 − 001 S L B 01 R − 02
(1) (2) (3) (4) (5)

(1) Pin No.
06:6PIN

(2) HOUSING MATERIAL:
L:LCP

(3) HOUSING COLOR:
B:BLACK

(4) CONTACTS PLATED:
01:半金锡1U

(5) PACKING OPTIONS
R:TAPE & REEL

TABLE:

NO	PART	Q'TY	Material
1	SHELL	1	STAINLESS STEEL,NI PLATED
2	CONTACT	6	COPPER STEEL,TIN/Au/NI PLATED
3	HOUSING	1	HIGH TEMPERATURE RESISTANT PLASTIC BLACK UL94 V−0

USB TYPE C PIN ASSIGNMENTS

PIN NUMBER	SIGNAL NAME	PIN NUMBER	SIGNAL NAME
A5	CC1	B12	GND
A9	VBUS	B9	VBUS
A12	GND	B5	CC2

PART NO.:
SEE THE PART NUMBER CODE

QUALITY SYMBOL

GENERAL TOLERANCES (UNLESS SPECIFIED)

x.xxxx	± ---
x.xxx	± 0.10
x.xx	± 0.20
x.x	± 0.30
ANGULAR	± --°

Goldconn Technologies Co., Ltd

TITLE: TYPE CF 6P单排直立式SMT H=5.1(T0.2/无护角)

DWG.NO. CF106−001−02

SHEET NO. 1 OF 1

DIMENSION STYLE: MM ONLY

DESIGN UNITS: METRIC

SCALE: 1:1

	DATE
DRAWN BY: SAM	2020.09.28
CHECKED BY: JAY	2020.09.28
APPROVED BY: JACKY	2020.09.28

THIRD ANGLE PROJECTION

frame size: A4