RoHS Compliant Pb

REV	ECN No.	DATE	REMARK
A	NEW	2018.03.06	NEW RELEASE
B		2020.09.22	1.中隔片两侧屏蔽片外露，公头对插时接触更稳定 2.端子SMT根部加宽，改善高频性能 3.EMC弹片用INSERT MOLDING结构，结构更稳定

CAP示意图

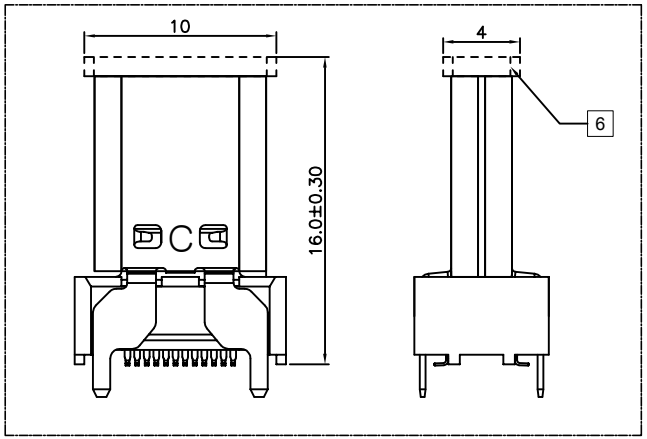

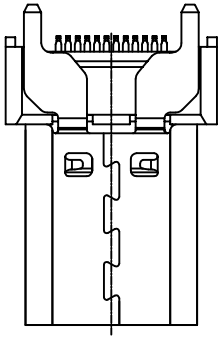

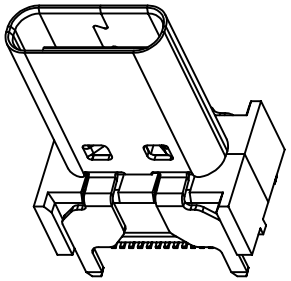

NOTE:
1.Contact Resistance:40mOHM Max.;
2.Dielectric Withstanding Voltage:100V AC For 1 Minute;
3.Insulation Resistance:100M OHM Min.;
4.Mating And Unmating Force:
Mating Force: 5~20N
Unmating Force: 8~20N;
6~20N AFTER TEST;
5.Durability:10000 Cycles;
6. PART NUMBER CODE:

CF103-24 L X XX R-C3

CONTACTS PLATED:
01:半金锡1u"
HOUSING COLOR:
B:BLACK

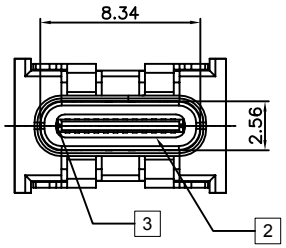

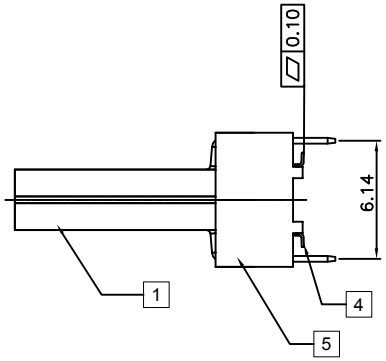

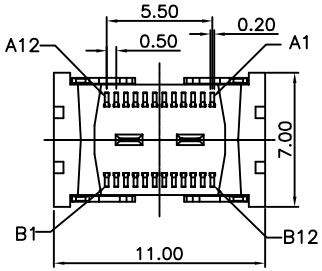

USB TYPE-C PIN ASSIGNMENTS

PIN NUMBER	SIGNAL NAME	PIN NUMBER	SIGNAL NAME
A1	GND	B12	GND
A2	SSTXp1	B11	SSRXp1
A3	SSTXn1	B10	SSRXn1
A4	VBUS	B9	VBUS
A5	CC1	B8	SBU2
A6	Dp1	B7	Dn2
A7	Dn1	B6	Dp2
A8	SBU1	B5	CC2
A9	VBUS	B4	VBUS
A10	SSRXn2	B3	SSTXn2
A11	SSRXp2	B2	SSTXp2
A12	GND	B1	GND

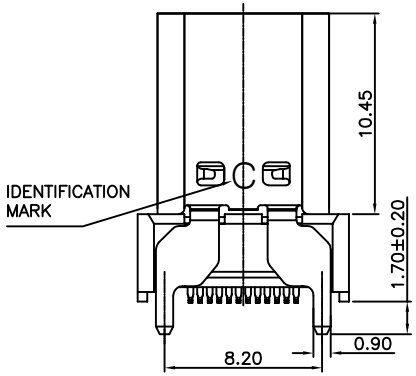

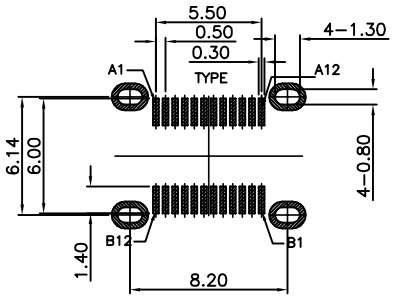

RECOMMEND P.C.B LAYOUT(COMPONENT SIDE)

TOLERANCE FOR PCB LAYOUT IS ± 0.05

KEEP OUT AREA

Item	Title	Material	Dispose	Q'TY
1	Shell	SUS304	Ni:30u" Min.	1PCS
2	GND Plate	SUS301		2PCS
3	Mid Plate	SUS301		1PCS
4	Contact	C7025	Mating Area: See P/N Solder Tails: Matt Tin	2PCS
5	InsertMolding	LCP E6808	UL 94V-0 Black	1PCS
6	COVER	LCP E6808	UL 94V-0 Black	1PCS

PART NO.:
SEE THE PART NUMBER CODE

QUALITY SYMBOL

GENERAL TOLERANCES (UNLESS SPECIFIED)	
X.XXXX	± ---
X.XXX	± 0.10
X.XX	± 0.25
X.X	± 0.30
ANGULAR	± --°

Goldconn Technologies Co., Ltd

TITLE: USB 3.1 TYPE C FEMALE VERTICAL H 15.0mm SMT TYPE

DWG.NO.: CF103-24-C3

SHEET NO.: 1 OF 1

DIMENSION STYLE: MM ONLY

DESIGN UNITS: METRIC

SCALE: 1:1

DRAWN BY	DATE
SAM	2020-04-15
CHECKED BY	DATE
JAY	2020-04-15
APPROVED BY	DATE
JACKY	2020-04-15

THIRD ANGLE PROJECTION

frame size: A4