RoHS Compliant Pb

REV	ECN No.	DATE	REMARK
A	NEW	2020.10.15	NEW RELEASE

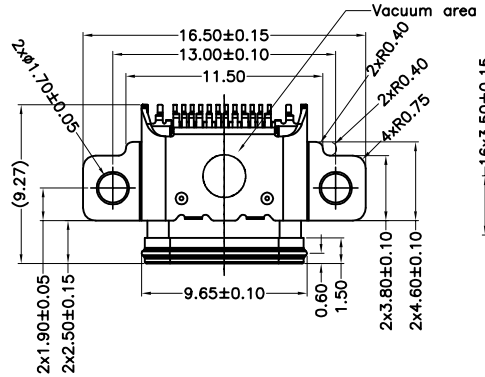

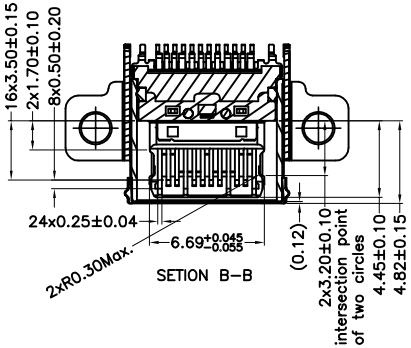

SETION B-B

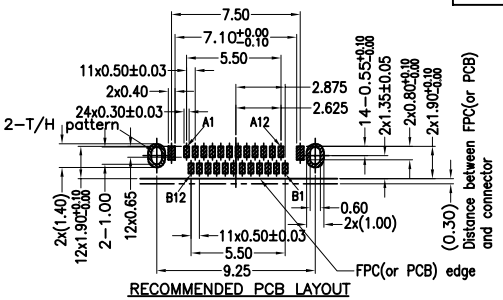

RECOMMENDED PCB LAYOUT
DEFAULT TOLERANCE:±0.05

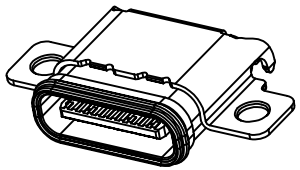

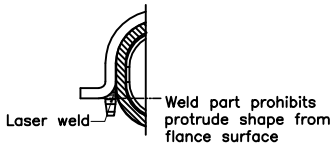

SETION C-C
SCALE 2:1

Remark:
1.MECHANICAL PERFORMANCE,
1-1.INSERTION FORCE: 5~20N.
1-2.EXTRACTION FORCE: 8~20N INITIAL,6~20N AFTER TEST;
1-3.DURABILITY: 10000 CYCLES.
2.ELECTRICAL PERFORMANCE,
2-1. CURRENT RATING:5A MIN FOR VBUS,0.25A MIN FOR OTHERS
VOLTAGE RATING: 20V MAX.
2-2. LLCR:
VBUS & GND PINS AND OTHER PINS: 40mΩ/PIN MAX.
2-3.INSULATION RESISTANCE: 100MΩ MIN
2-4.DIELECTRIC WITHSTAND VOLTAGE,AC 100V FOR 1 MINUTE.
3.The waterproof grade is IPX8.
4.PIN DEFINITION:(Some GND pins(A1,A12,B1,B12) and Mid Plate may connect together.)

PART NUMBER CODE:(产品料号)

CF247-24SL X XX R-C3
(1)(2)

(1) HOUSING COLOR:
B:BLACK
(2) CONTACTS PLATED:
14:接触镀金15u"焊接镀金1u"

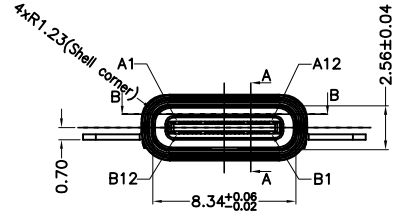

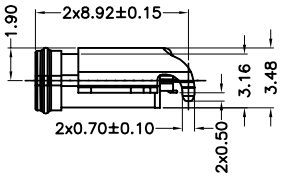

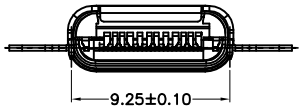

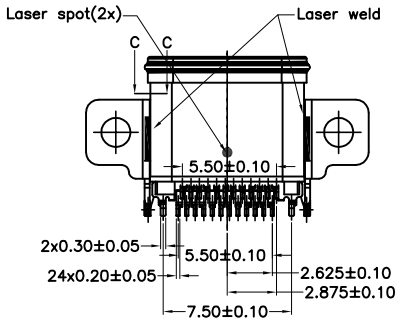

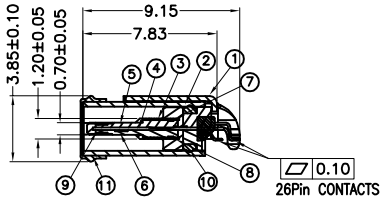

SETION A-A

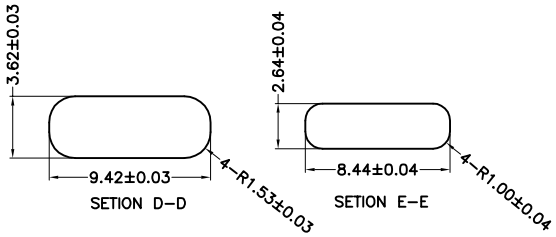

SETION D-D
SETION E-E

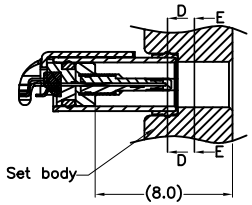

RECOMMENDED SET
BODY SIDE HOLE SHAPE

Item	Title	Material	Dispose
1	Frame	SUS304, T=0.30	Ni:40u" Min.
2	Shell	SUS316, T=0.30	Ni:40u" Min.
3	GND Plate	SUS301, T=0.10	None
4	Mid Plate	SUS301, T=0.15	Ni 40u"Min.+Solder area:Au 1u"Min.
5	Top Contact	C18150, T=0.12	Mating Area: Ni 80u"+Au 15u" Min.
6	Bottom Contact	C18150, T=0.12	Solder Tails: Ni 80u"+Au 1u" Min.
7	Housing A	High Temperature Plastic	LCP UL 94V-0/Black
8	Housing B	High Temperature Plastic	LCP UL 94V-0/Black
9	Housing C	High Temperature Plastic	LCP UL 94V-0/Black
10	Rubber(O-ring)	Si	Wihte or Gray
11	Rubber	Si	Black

PIN DEFINITION:

A1	A2	A3	A4	A5	A6	A7	A8	A9	A10	A11	A12
GND	TX1+	TX1-	VBus	CC1	D+	D-	SBU1	VBus	RX2-	RX2+	GND
GND	RX1+	RX1-	VBus	SBU2	D-	D+	CC2	VBus	TX2-	TX2+	GND
B12	B11	B10	B9	B8	B7	B6	B5	B4	B3	B2	B1

PART NO.:
SEE THE PART NUMBER CODE

GENERAL TOLERANCES (UNLESS SPECIFIED)

QUALITY SYMBOL		
≤ 0	x.xxxx	± ---
≤ 0	x.xxx	± 0.10
	x.xx	± 0.25
≤	x.x	± 0.30
	ANGULAR	± --°

GOLDCONN TECHNOLOGIES COMPANY LIMITED

TITLE: USB TYPE C 24PIN防水沉板CH0.7带耳

DWG.NO.: CF247-24-C3

SHEET NO.: 1 OF 1

DIMENSION STYLE: MM ONLY

DESIGN UNITS: METRIC

SCALE: 1:1

	DATE
DRAWN BY: SAM	2020.10.15
CHECKED BY: JAY	2020.10.15
APPROVED BY: JACKY	2020.10.15

THIRD ANGLE PROJECTION

frame size: A4